CLUTCH

CONTENTS

GENERAL INFORMATION 2

SERVICE SPECIFICATIONS 2

LUBRICANTS 2

ON-VEHICLE SERVICE 2

- Clutch Pedal Inspection and Adjustment 2
- Bleeding 3

CLUTCH PEDAL 4

CLUTCH CONTROL 5

- Clutch Master Cylinder 7

GENERAL INFORMATION

The clutch is a dry single-disc, diaphragm type; hydraulic pressure is used for the clutch control.

SERVICE SPECIFICATIONS

Items	Standard value
Clutch pedal height mm	212 – 215 <L.H. drive vehicles> 202 – 205 <R.H. drive vehicles>
Clutch pedal clevis pin play mm	1 – 3
Clutch pedal free play mm	6 – 13
Distance between the clutch pedal and the toeboard when the clutch is disengaged mm	110 or more

LUBRICANTS

Items	Specified lubricants	Quantity
Clutch fluid	Brake fluid DOT3 or DOT4	As required
Push rod assembly	Rubber grease	
Release cylinder push rod	MITSUBISHI genuine grease Part No. 0101011	

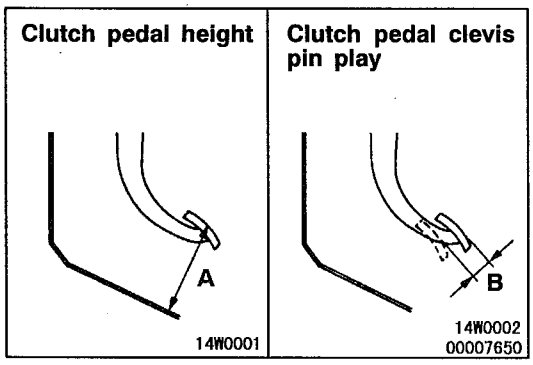

ON-VEHICLE SERVICE

CLUTCH PEDAL INSPECTION AND ADJUSTMENT

1. Turn up the carpet, etc. under the clutch pedal.
2. Measure the clutch pedal height and the clutch pedal clevis pin play.
   Standard value (A):
   212 – 215 <L.H. drive vehicles>
   202 – 205 <R.H. drive vehicles>
   Standard value (B): 1 – 3 mm

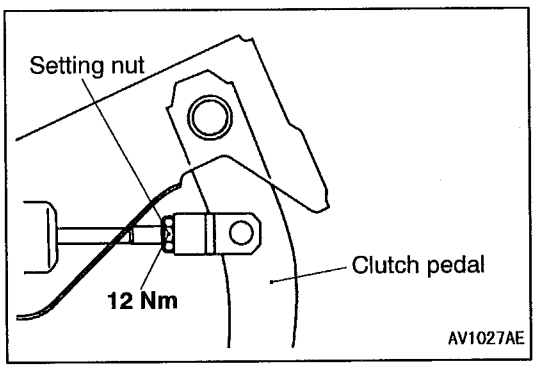

3. If the clutch pedal height and the clutch pedal clevis pin play are outside the standard value, turn the setting nut to adjust them to the standard value.

Caution
Do not push in the master cylinder push rod at this time, otherwise the clutch will not operate properly.

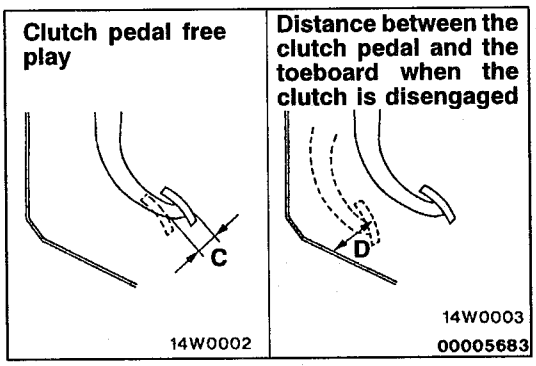

4. After completing the adjustments, confirm that the clutch pedal free play (measured at the face of the pedal pad) and the distance between the clutch pedal (the face of the pedal pad) and the toeboard when the clutch is disengaged are within the standard value ranges.

Standard value (C): 6 – 13 mm
Standard value (D): 110 mm or more

5. If the clutch pedal free play and the distance between the clutch pedal and the toeboard when the clutch is disengaged do not agree with the standard values, it is probably the result of either air in the hydraulic system or a faulty master cylinder, release cylinder or clutch. Bleed the air, or disassemble and inspect the master cylinder, release cylinder or clutch.
6. Turn back the carpet, etc.

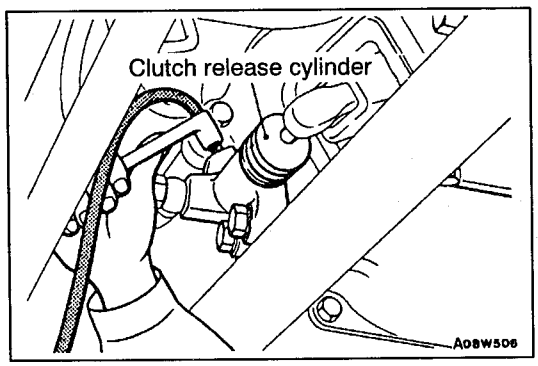

BLEEDING

Specified fluid: Brake fluid DOT 3 or DOT 4

Caution
Use the specified brake fluid. Avoid using a mixture of the specified fluid and other fluid.

CLUTCH PEDAL

REMOVAL AND INSTALLATION

Post-installation Operation
Clutch Pedal Adjustment (Refer to P.21-2)

L.H. drive vehicles

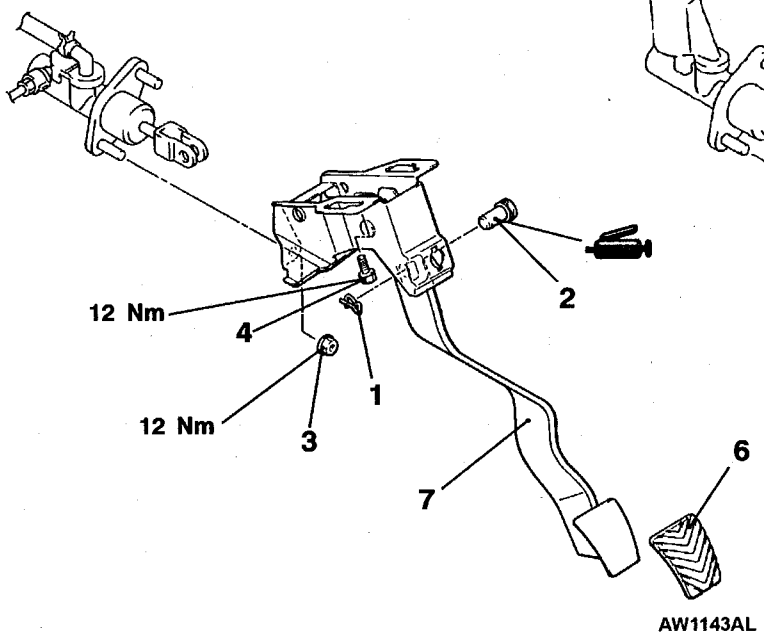

AW1143AL

R.H. drive vehicles

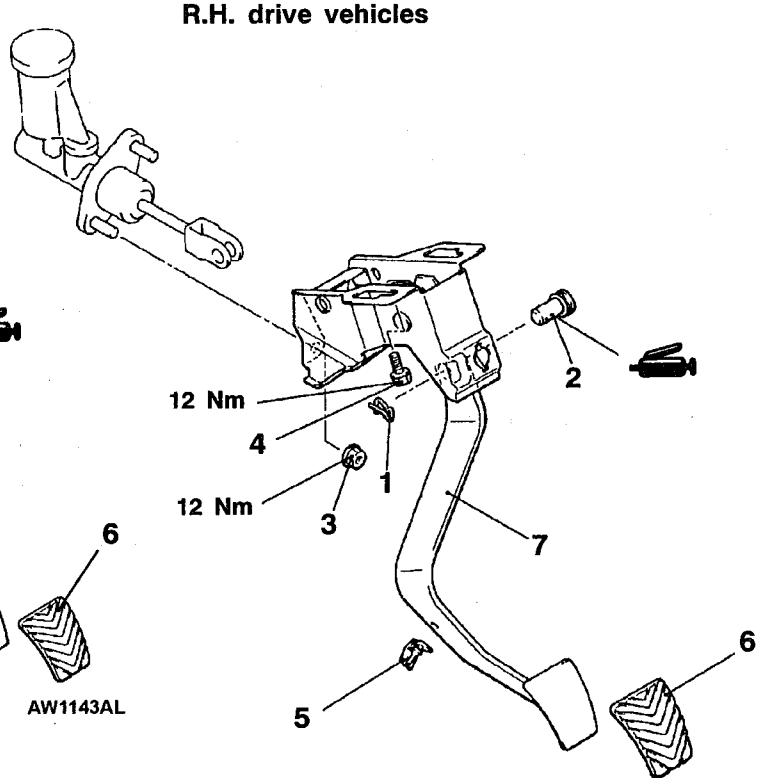

AW0154AL

Removal steps

1. Snap pin
2. Clevis pin
3. Clutch master cylinder mounting nut
4. Master cylinder member mounting bolt
5. Stopper <R.H. drive vehicles>
6. Pedal pad
7. Clutch pedal assembly

CLUTCH CONTROL

REMOVAL AND INSTALLATION

Pre-removal Operation
Clutch Fluid Draining

Post-installation Operation
- Clutch Fluid Supplying
- Clutch Line Bleeding (Refer to P.21-3)
- Clutch Pedal Adjustment (Refer to P.21-2)

<L.H. drive vehicles>

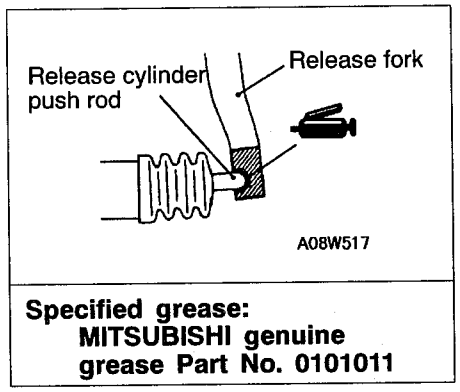

Specified grease:
MITSUBISHI genuine grease Part No. 0101011

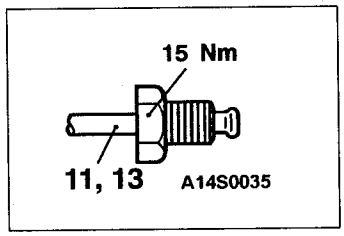

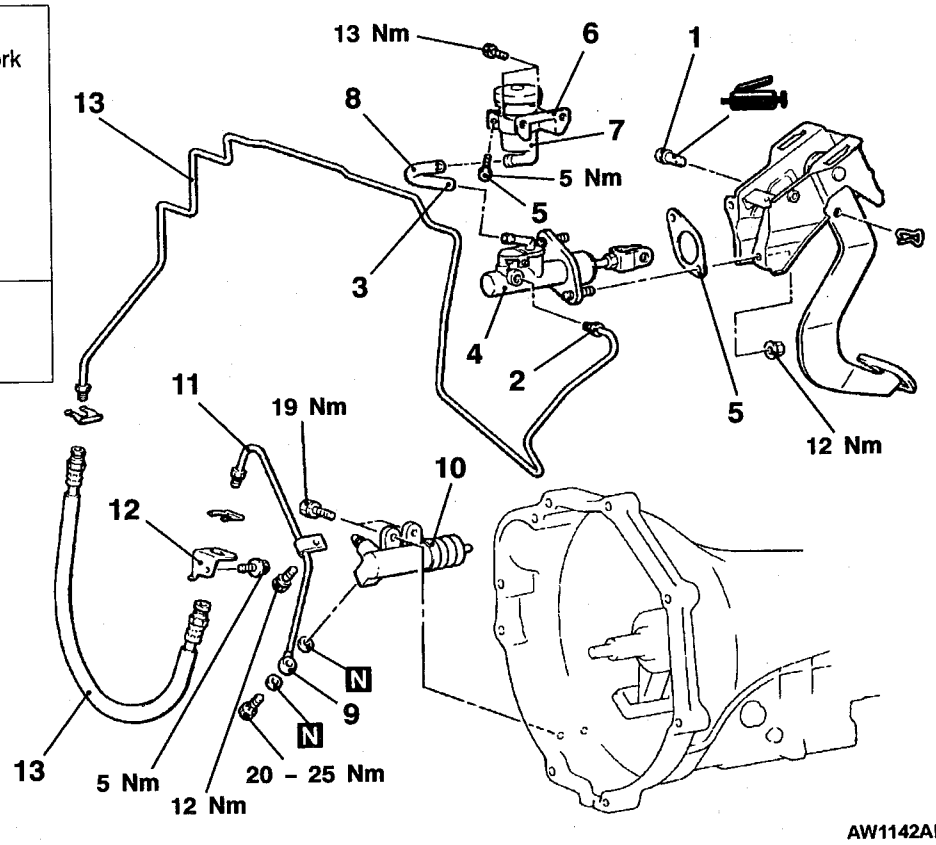

Clutch master cylinder assembly removal steps
1. Clevis pin
2. Clutch pipe connection
3. Breather hose connection
4. Clutch master cylinder assembly
5. Sealer

Reservoir tank removal steps
3. Breather hose connection
5. Bolt
6. Reservoir bracket
7. Reservoir tank
8. Breather hose

Clutch release cylinder assembly removal steps
9. Clutch pipe connection
10. Clutch release cylinder assembly

Clutch line removal steps
11. Clutch pipe
12. Bracket
13. Clutch hose

<R.H. drive vehicles>

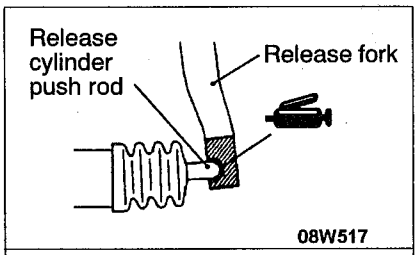

Specified grease:
MITSUBISHI genuine grease Part No. 0101011

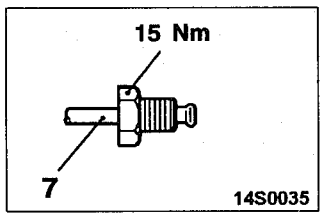

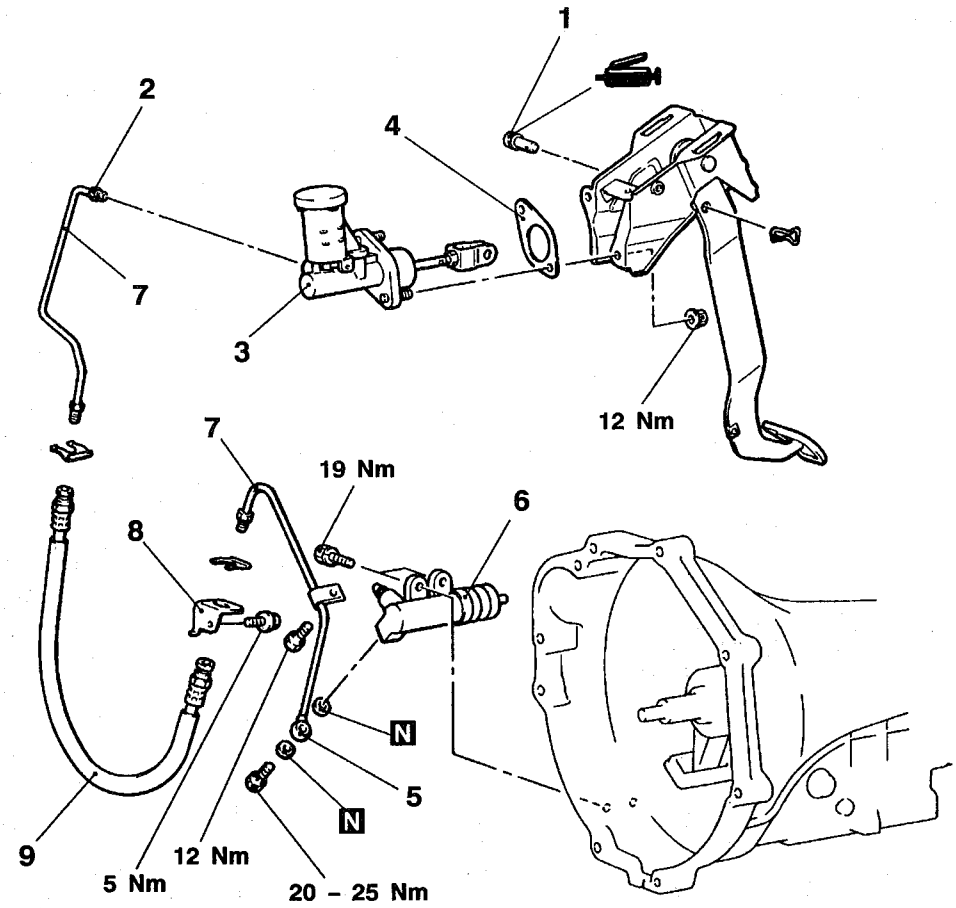

Clutch master cylinder assembly removal steps

1. Clevis pin
2. Clutch pipe connection
3. Clutch master cylinder assembly
4. Sealer

Clutch release cylinder assembly removal steps

5. Clutch pipe connection
6. Clutch release cylinder assembly

Clutch line removal steps

7. Clutch pipe
8. Bracket
9. Clutch hose

DISASSEMBLY AND REASSEMBLY

CLUTCH MASTER CYLINDER

Caution
Do not disassemble piston assembly.

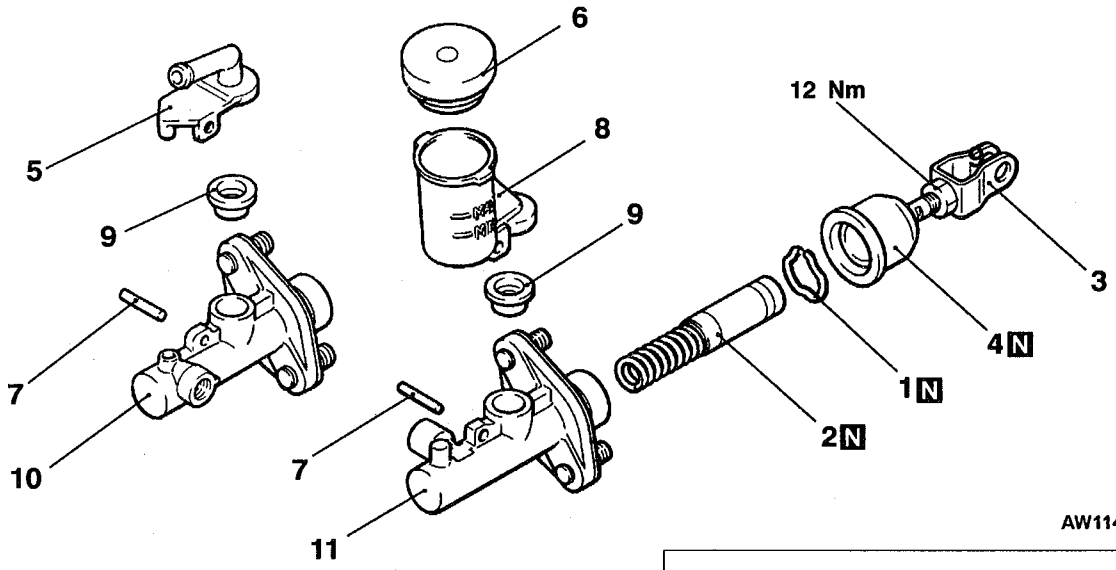

AW1144AL

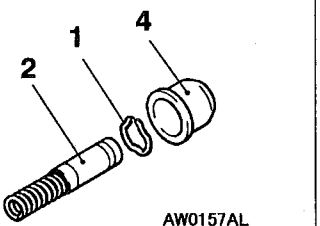

AW0157AL

Piston repair kit

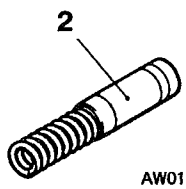

AW0158AL

Clutch fluid:
Brake fluid DOT3 or DOT4

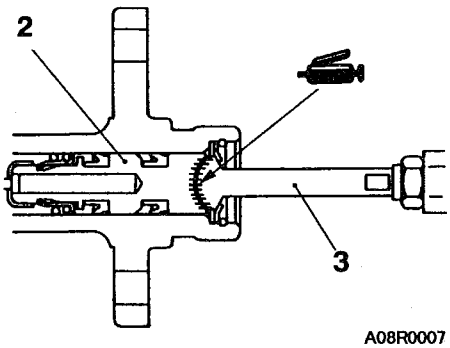

A08R0007

Grease: Rubber grease

Disassembly steps

1. Piston stopper ring
2. Piston assembly
- ▶A◀ 3. Push rod assembly
4. Boot
5. Nipple <L.H. drive vehicles>
6. Reservoir cap <R.H. drive vehicles>
7. Spring pin
8. Reservoir tank <R.H. drive vehicles>
9. Seal
10. Master cylinder body <L.H. drive vehicles>
11. Master cylinder body <R.H. drive vehicles>

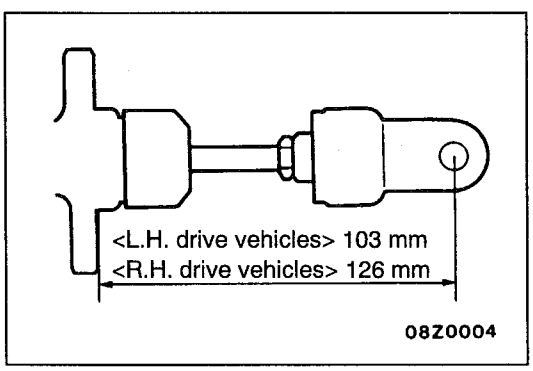

08Z0004

INSTALLATION SERVICE POINT

▶A◀ PUSH ROD ASSEMBLY INSTALLATION

Set the length of the push rod assembly to the shown dimension to make the adjustment of clutch pedal easier.

NOTES